Type IVG (metal internal thread)

RoHS compliant

IP68

-40 to 110 °C
transient 140 °C

Mod. polyamide
Brass, nickel-plated

V0

IP 68 to 6 bar (IP 69K)

Straight conduit fitting with metal internal thread.

- Insert conduit → screw upper part tight → ready
- Reliable assembly because fitting is supplied pre-assembled. No additional parts required
- Resistant to vibration due to lockable cap nut
- Clamping along entire circumference ensuring maximum tear-out strength
- High sealant properties corresponding to IP 68 to 6 bar (IP 69K) without additional parts
- Simple check that the conduit is assembled correctly

IVG

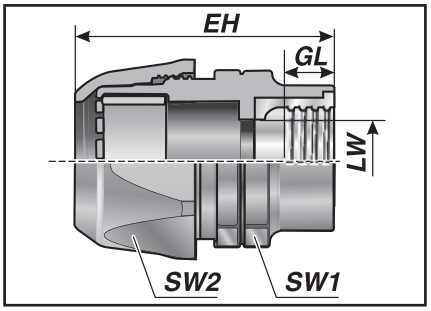

Type	Order no.	Colour	Connecting thread	Suitable for Murrflex	EH mm	GL mm	LW mm	SW 1/2 mm	Pack qty.
Metric metal internal thread									
IVG M12-M	83571052	black	M12x1.5	M12/P9	31.0	8.0	6.5	20/20	50
IVG M16-M	83571054	black	M16x1.5	M16/P11	37.0	8.0	10.0	25/25	50
IVG M20-M	83571056	black	M20x1.5	M20/P16	45.0	10.0	14.0	33/33	50
IVG M25-M	83571058	black	M25x1.5	M25/P21	47.0	10.0	18.3	41/41	50
IVG M32-M	83571060	black	M32x1.5	M32/P29	56.0	13.0	24.0	50/50	25
IVG M40-M **	83571062	black	M40x1.5	M40/P36	70.0	14.0	33.0	60/60	25
IVG M50-M	83571064	black	M50x1.5	M50/P48	80.0	15.0	44.0	75/75	10

** CSA authorisation