End Stop 30x24

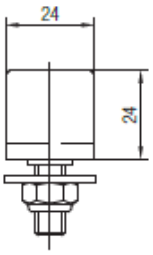

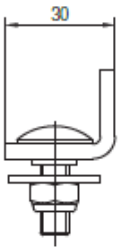

Order No. 023215*
- Material: galvanized steel
- Weight: 0.06 kg

* Standard range

Application Example for End Stop Assembly

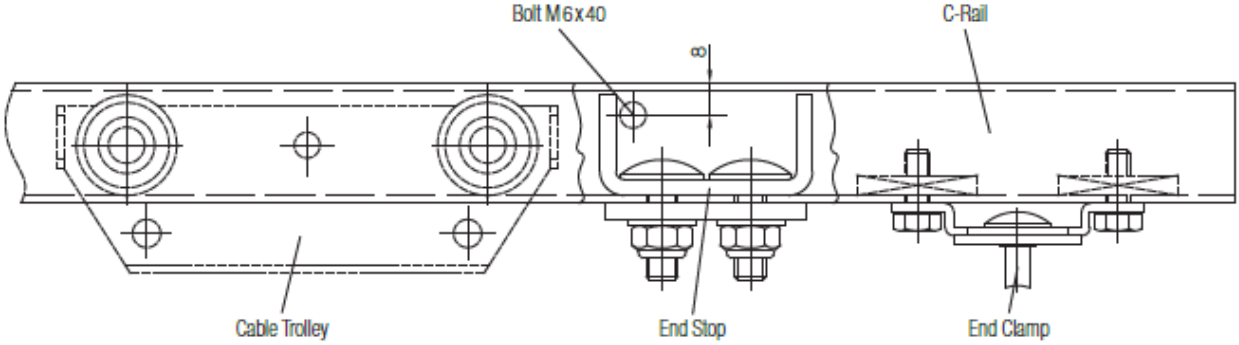

Notes
The end stop is fixed in the C-rail between the end clamp and the cable trolley.
This helps to prevent cable trolleys running into the end clamp.
For control supply systems with manually driven ideal control trolleys an end stop mounted at the end of the C-rail prevents the ideal control trolley from travelling out of the rail.